DETECTO HANGING SCALE STAND
Model HS-STAND Assembly Instructions

Thank you for purchasing our Detecto Model HS-STAND Hanging Scale Stand. It has been manufactured with Detecto quality and reliability. This following instructions will guide you through assembly of your stand.

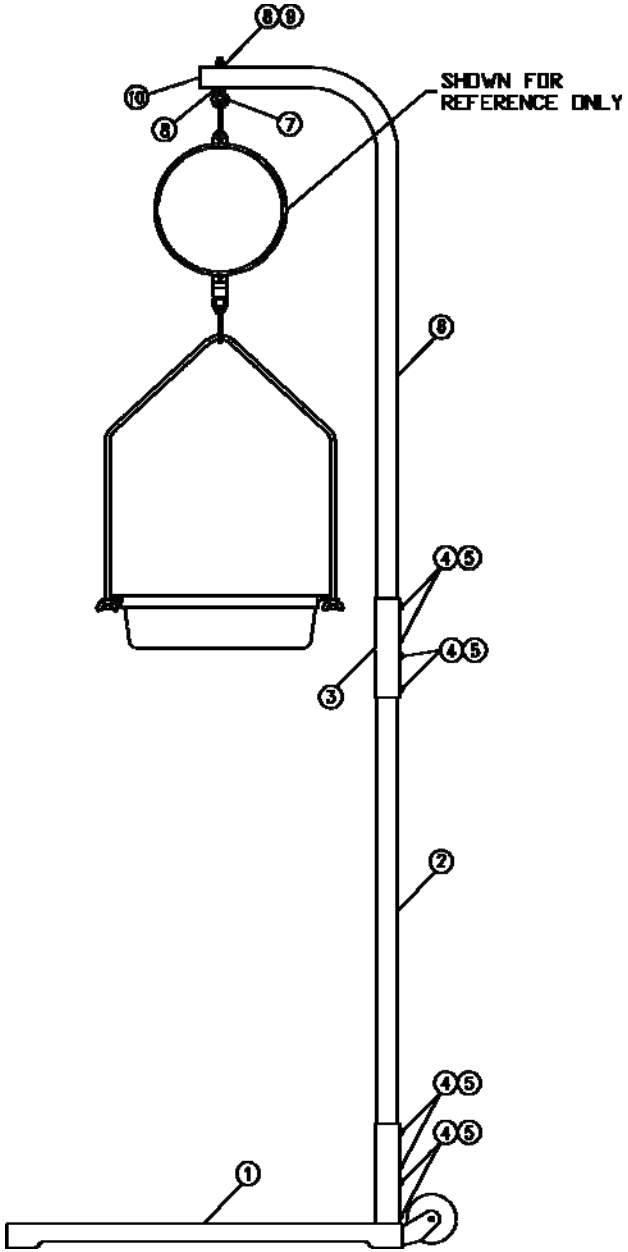

IMPORTANT!

Please read through instructions carefully before starting to assemble. Remove all parts and hardware from carton. Make sure all screws and the eye-bolt and nut are tight before using stand.

PARTS LIST

Note that the item numbers in the instructions are the same as the parts list numbers.

ITEM NO.	QTY	PART NUMBER	DESCRIPTION
1	1	0031-0176-0A	STAND BASE
2	1	0031-0178-08	LOWER POST
3	1	0031-0177-08	COUPLER
4	8	6021-0988	#10-32 HEX HEAD SCREW
5	8	6024-1027	#10 FLAT WASHER
6	1	0031-0179-08	UPPER POST
7	1	6007-3102	EYE BOLT
8	2	6024-0003	1/4” FLAT WASHER
9	1	391RV204	1/4-20 ELASTIC STOP NUT
10	1	6540-1078	SQUARE PLUG

TOOLS NEEDED

- 5/16" open end, box end, or combination wrench
- 7/16" open end, box end, or combination wrench

ASSEMBLY

1. Remove all packing material and contents of the carton.
2. Place STAND BASE (1) on a flat level surface.
3. Next place LOWER POST (2) into upright tube of STAND BASE (1).
4. Align holes in LOWER POST (2) with holes in upright tube of STAND BASE (1).
5. Insert a #10-32 HEX HEAD SCREW (4) with #10 FLAT WASHER (5) through all four holes and tighten with 5/16” wrench.
6. Now place COUPLER (3) onto LOWER POST (2) and align lower two holes in COUPLER (3) with holes in LOWER POST (2).
7. Insert a #10-32 HEX HEAD SCREW (4) with #10 FLAT WASHER (5) through both holes and tighten with 5/16” wrench.
8. Next place UPPER POST (6) into COUPLER (3) and align holes in UPPER POST (6) with upper two holes in COUPLER (3).
9. Insert a #10-32 HEX HEAD SCREW (4) with #10 FLAT WASHER (5) through both holes and tighten with 5/16” wrench.
10. Place a 1/4” FLAT WASHER (8) onto EYE BOLT (7) and insert EYE BOLT (7) through hole in UPPER POST (6).
11. Place a 1/4” FLAT WASHER (8) onto EYE BOLT (7) and secure with 1/4-20 ELASTIC STOP NUT (9). Make sure EYE BOLT (7) is turned in UPPER POST (6) so that scale hangs in desired direction and then using the 7/16” wrench, tighten 1/4-20 ELASTIC STOP NUT (9) securely.
12. Insert SQUARE PLUG (10) into end of UPPER POST (6) and gently tap in place.
13. Stand is now ready to hang scale. Refer to scale manual for instructions to hang scale.

DETECTO®
www.Detecto.com

203 E. Daugherty, Webb City, MO 64870 USA
Ph: 417-673-4631 or 1-800-641-2008 Fax: 417-673-2153
Technical Support: Ph: 866-254-8261 • tech@cardet.com